PROJECT REFERENCE NO.	SHEET NO.
W-5601AW	Sig. 1.1

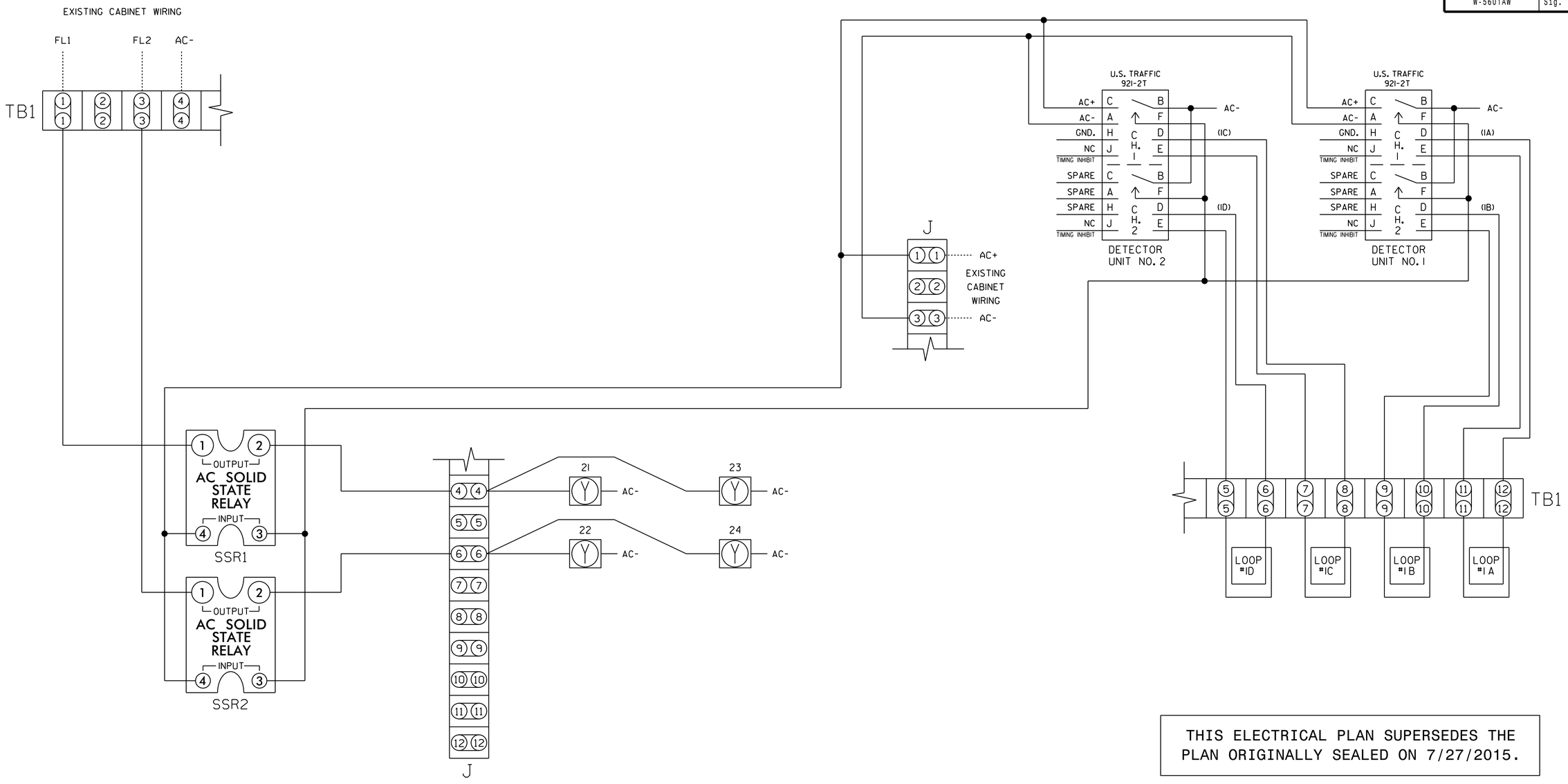

THIS ELECTRICAL PLAN SUPERSEDES THE PLAN ORIGINALLY SEALED ON 7/27/2015.

THIS ELECTRICAL DETAIL IS FOR
THE SIGNAL DESIGN: 05-1465
DESIGNED: July 2015
SEALED: 7/29/2015
REVISED: N/A

NOTE!

1. SET EXTEND TIME TO 9.0 SECONDS FOR CHANNEL #1 OF BOTH DETECTORS.
2. SET EXTEND TIME TO 5.0 SECONDS FOR CHANNEL #2 OF BOTH DETECTORS.
3. SET ALL DETECTOR UNIT CHANNELS TO 'PRESENCE' MODE.

NOTES

1. RELAYS 'SSR1' AND 'SSR2' ARE SPST SOLID STATE RELAYS WITH AC INPUT, AC OUTPUT. (DOT NO. 625028740)
2. DETECTORS 1 & 2 ARE U.S.TRAFFIC NO. 921-2T 2-CHANNEL, DIGITAL, WITH NO. 801A-6 'MS' CONNECTOR HARNESS. (DOT NO. 617031530)
3. TERMINAL BLOCK DESIGNATIONS SHOWN ARE FOR AN RGA, INC. DUAL CIRCUIT NEMA FLASHER CABINET, RGA DWG. NO. FC-NCF3-TYPICAL. (DOT NO. 609024300)
4. MOV'S AND TERMINAL BLOCKS ARE FURNISHED WITH THE FLASHER CABINET.
5. ! REMOVE BONDING JUMPER BETWEEN AC NEUTRAL AND EQUIPMENT GROUND IN FLASHER CABINET IF A SIMILAR JUMPER IS INSTALLED IN EITHER METER BASE OR DISCONNECT ENCLOSURES.

Electrical Detail

ELECTRICAL AND PROGRAMMING DETAILS FOR:

Prepared in the Offices of:
Transportation Mobility and Safety Division
Signals Management Section
750 N. Greenfield Pkwy, Garner, NC 27529

US 401
at
SR 1110 (E. F. Cottrell Road)

Division 5 Franklin County near Louisburg

PLAN DATE:	July 2015	REVIEWED BY:	JTR
PREPARED BY:	S. Armstrong	REVIEWED BY:	

REVISIONS	INIT.	DATE

SEAL
NORTH CAROLINA PROFESSIONAL SEAL 008453 ENGINEER JOHN T. ROWE, JR.

DocuSigned by:
John T. Rowe, Jr. 7/29/2015
641D60C145EE4F5...
DATE

SIG. INVENTORY NO. 05-1465

29-JUL-2015 11:39
S:\TIMS\SUPPORT\TS Signals\Workgroups\Sig Mon\Armstrong\051465_smu_ele_xxx.dgn
sarmstrong